YT-7603-F1 Lens Specification

MAX Img-Circle（mm）	ø5.65
EFL（mm）	1.34
F/NO.	2.0
Optical TTL	16.78
Mechanical TTL	16.78
BACK FOCAL LENGTH	3.10
FLANGE BACK LENGTH	2.41
Optical DISTORTION	<-140%
RELATIVE ILLUMINATION	>38%
CRA	11.5°
Pixel Size（μm）	3.0*3.0um
Storage At Temperature	-40℃/+85℃
Recent Camera Distance	0.2
Infrared	No
WAVELENGTH	@420~600nm Tavg≥90% @650±10nm T=50%
Dust Level	IP69K
STRUCTURE	2G4P+IIR

REV.	00
REVISON HISTORY	
2024/03/16	NEW

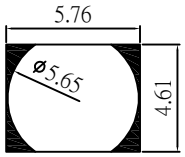

有效像面

SENSOR	ISX031
RESOLUTION	1920*1536
D/FOV	>200° / ø7.38
H/FOV	>200° / ø5.76
V/FOV	171° / ø4.61

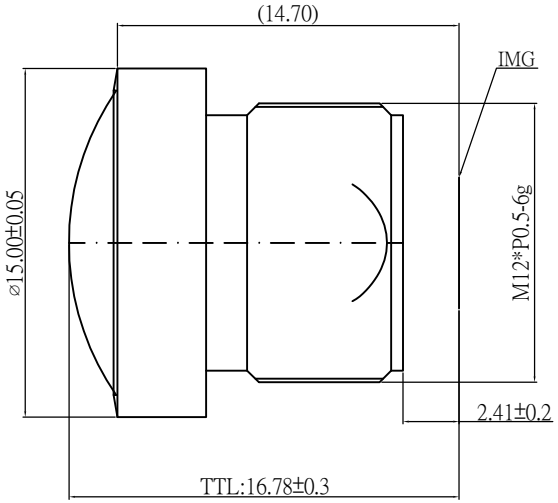

REV	DESCRIPTION	DATE	NAME
①			
②			
③			
④			

NAME	YT-7603-F1-SPEC	SCALE		DRAWN	黄光深
VIEW	REV 00	DATE	2024.03.16	CHECKED	
Wintop Optics		BORDER		APPROVED	