YT-7601-F1 Lens Specification

云泰型号:	客户型号:
YT-7601-F1	

MAX Img-Circle（mm）	ø6.8
EFL（mm）	2.33
F/NO.	2.4
Optical TTL	17.05
Mechanical TTL	17.05
BACK FOCAL LENGTH	4.89
FLANGE BACK LENGTH	3.0
TV DISTORTION	>-12%
RELATIVE ILLUMINATION	>80%
CRA	11°
Pixel Size（μm）	2*2
Storage At Temperature	-25℃~+85℃
Recent Camera Distance	0.2
Infrared	
WAVELENGTH	@420~600nm Tavg≥90% @650±10nm T=50%
Dust Level	IPXX
STRUCTURE	6G+IBG

IMX675	2592*1944
D	169° / ø6.48
H	132° / ø5.18
V	97° / ø3.89

REV.	00
REVISON HISTORY	
2024/03/16	NEW

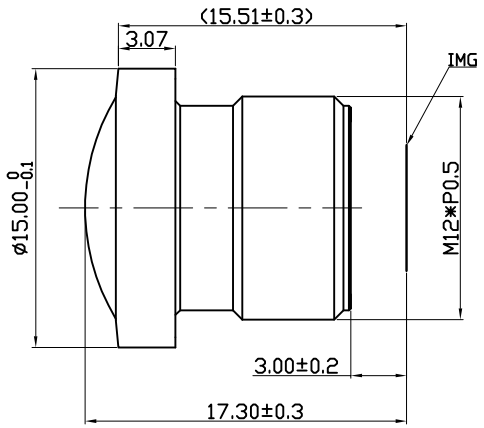

REV	DESCRIPTION	DATE	NAME
①			
②			
③			
④			

NAME	YT-7601-F1-SPEC	SCALE		DRAWN	黄光深
VIEW	REV 00	DATE	2024.3.16	CHECKED	
Wintop Optics		BORDER		APPROVED	